Cód. 50121600

Protocol converter

CD-PLUS/90

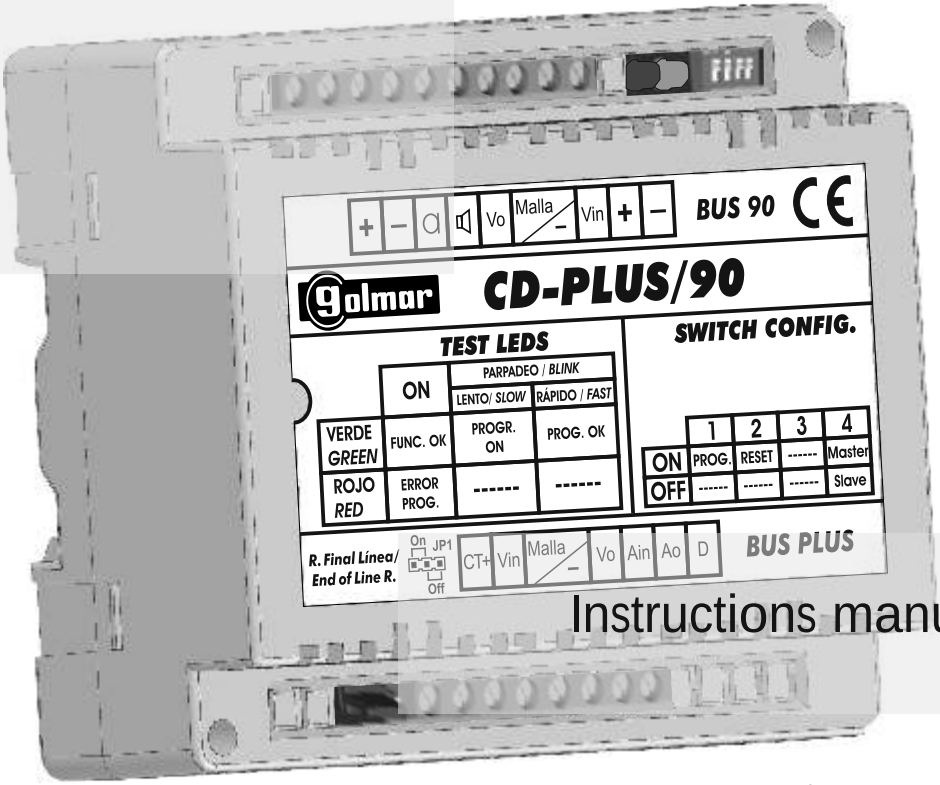

Instructions manual

TCD-PLUS/90ML rev.0112

INTRODUCTION

First of all we would like to thank and congratulate you for the purchase of this product manufactured by Golmar.

The commitment to reach the satisfaction of our customers is stated through the ISO-9001 certification and for the manufacturing of products like this one.

Its advanced technology and exacting quality control will do that customers and users enjoy with the legion of features this system offers. To obtain the maximum profit of these features and a properly wired installation, we kindly recommend you to expend a few minutes of your time to read this manual.

SYSTEM CHARACTERISTICS

- Protocol converter to *90* system which permits the following functions:
  - Permits replace a faulty *90* door panel by a *Plus* door panel.
  - Permits installation of *Plus* general door panels with inner access in the *90* system.
  - Permits installation of a *Plus* coded door panel with *90* monitors/telephones.
- Up to 250 converters per installation.
- Simple configuration through easy access dip switches.
- End of line configuration jumper *JP1*.
- Autodiagnostic LEDs that allow detecting operation and programming errors.
- The converter is factory set with backbone address "0".
- Connection block to *90* system (video connection with Coaxial cable).
- Connection block to *Plus* system (video connection with Coaxial cable).
- *EL564* transceiver to convert video signal from twisted pair to coaxial and from coaxial to twisted pair.
- Permits installation of a *Plus* porter's exchange only in the side *Plus* system installation.
- Specific Power supply not needed for this converter, it takes of the *90* system installation the supplies voltage (24Vdc).

SAFETY PRECAUTIONS

- The installation and handling of the converter must be performed by authorized personnel and in the absence of electrical current.
- Do not use excessive force when tightening the converter connection block screws.
- The entire installation must be at least 40cm away from any other installation.
- Install the converter in a dry and protected place without risk of drip or water projections.
- Avoid placing the converter near sources of heat, in dusty locations or smoky environments.
- Do not block ventilation holes of the unit so that air can circulate freely.
- To avoid damage, the converter has to be firmly fixed.

STARTING RECOMMENDATIONS

- Do not use excessive force when tightening the converter connection block screws.
- Before connecting the system, check the connections between door panel, converter, transceiver, monitors, telephones and the power supply connection.
- The entire installation must be at least 40cm away from any other installation.
- Always follow the instructions of this manual.

Replacement in a 90 system.

Permits replace a faulty *90* door panel by a *Plus* door panel, the *Plus* door panel installed will be connected to the *90* system through the protocol converter *CD-Plus/90.* There is an option to place a *CE-990 Plus* porter's exchange between the converter and the *Plus* door panel.
Installation diagrams on pages 38 to 46.

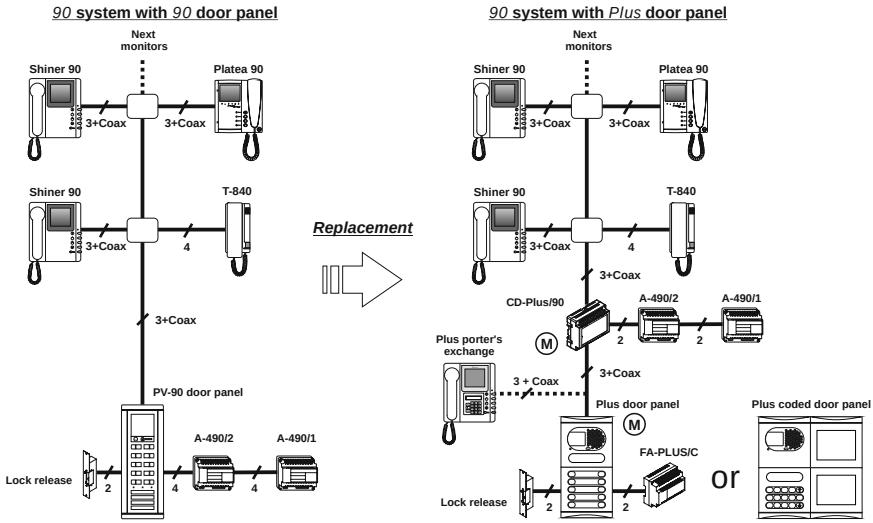

For other configurations of replacement contact with your distributor.

Transceiver module for video signal.

The transceiver module for video signal *EL-564 converts a twisted pair to coaxial and vice versa.* This module is necessary in a system with *4+TP* installation and to convert the twisted pair to coaxial, and therefore connect the video signal in the protocol converter *CD-Plus/90* of the entrance coaxial. There is an option to place a *CE-990 Plus* porter's exchange between the converter and the *Plus* door panel.
Installation diagrams on pages 40, 43, 44 and 46.

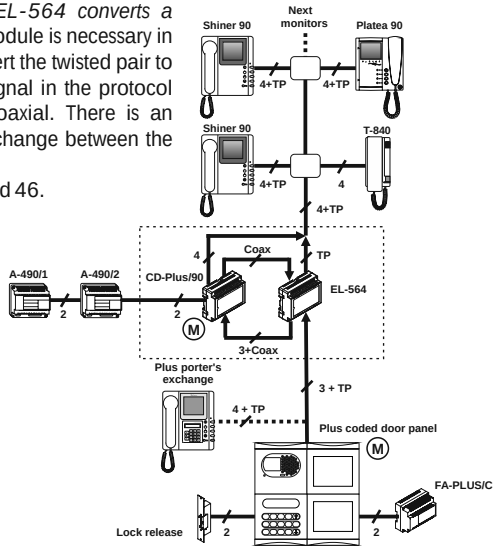

* Terms:
Backbone: Logical address.
Riser: Physical cabling of the installation in the same backbone (logical address).

(M) = Master.

(S) = Slave.

DESCRIPTION

Description of the converter.

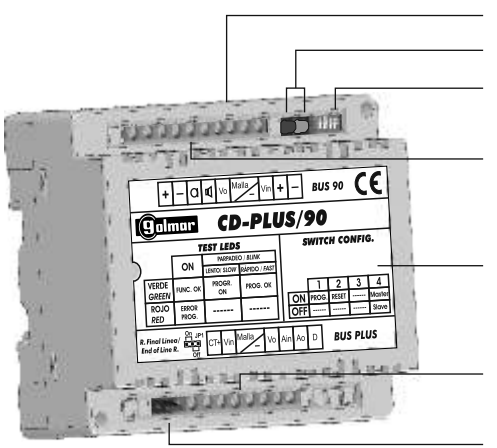

INSTALLATION

Detail of the converter installation.

Install the converter in a dry and protected place without risk of drip or water projections.
To avoid damage, the conveter must be firmly fixed.

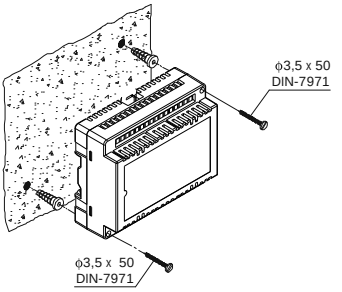

The installation or modification the converter, must be performed in the absence of electrical current.
The installation and handling of the converter must be performed by authorized personnel.

To install the converter directly on the wall, drill two holes of ∅ 6mm. and insert the wallplugs. Fix the converter with the specified screws.

the converter can be installed on a DIN guide (6 elements), pressing it lightly.
To extract the converter from the DIN guide, use a plain screwdriver to lever the flange as shown in the picture.

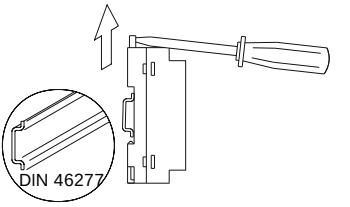

Description of the configuration dip switch.

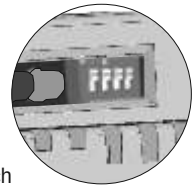

The SW1 configuration dip switch is located on the upper right part of the module.

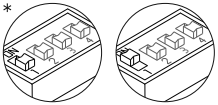

Set to ON to programme the backbone.
Once the programming has finished, return the switch to the OFF position.

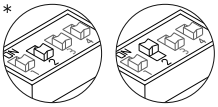

To reset the converter, switch to ON (all leds Off) and then set to OFF (green led On), after an operation or programming errors.

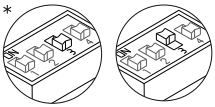

No function.

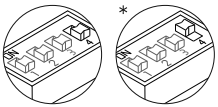

Set to ON (Master) to charge the installation with a resistance of communications. Only activate this resistance in the converter CD-Plus/90 or in the 90 door panel closest to the installation riser.
Set to OFF (Slave) if the resistance of communications is activated in the 90 door panel closest to the installation riser.

*Factory default

Description of the configuration jumper.

JP1

On

End of line resistor.
Switch to On if the converter is connected to the Plus system through distributors or only in the last converter if the connection to the Plus system of the converters does not contain distributors (input/output mode)

JP1

Off

End of line resistor.
Switch to Off in all the converters except the last one if the connection to the Plus system of the converters does not contain distributors (input/output mode).

*Factory default

Codification of the push-buttons/monitors in a replacement.

To replace a *90* door panel in an installation with *Plus* door panel, it must be borne in mind the codification of the first push-button of the *Plus* door panel and the configured address in the monitor linked to this push button, for the reason that *90* door panel has a call code address linked to the first push button as "00", therefore should be set the first push button and the monitor of the apartment with address "00" with another free address "XX".

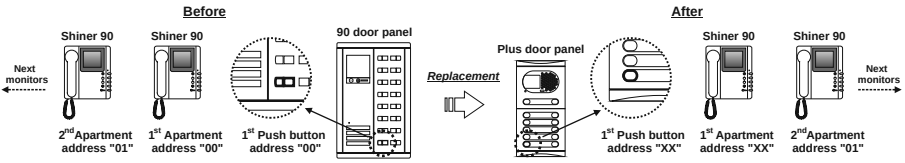

AUTODIAGNOSTIC LEDS

Description of autodiagnostic LEDs.

The autodiagnostic LEDs are placed next to the configuration dip switch.

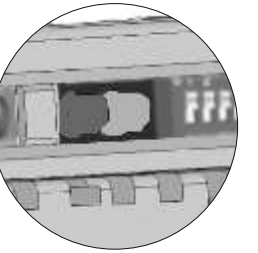

Green Led

Fixed: Correct operation.

Slow blinking: Programming active (SW1-1 to ON).

Quick blinking: Programming finished.

Red Led

Fixed: Programming error, restart programming from the beginning.

Off: Correct operation.

PROGRAMMING

Programming the converter.

The converter must be programmed with a backbone code (see pages 41 to 44), which must be different for each converter, following the steps set out below.

To access the door panel programming mode, press the key button followed by the secret installer code (factory default 1315), just as indicated in the door panel manual.

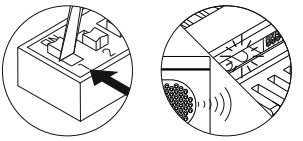

Activate the converter programming by setting dip switch number 1 to ON.

The door panel will emit a tone and the green LED on the converter will begin to blink slowly, indicating that programming has begun.

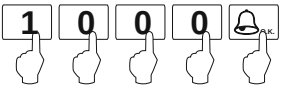

Introduce the backbone code to program, followed by three zeros, then press the bell button.

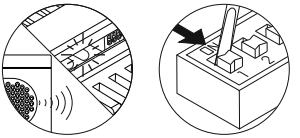

To indicate that the equipment has been correctly programmed, the door panel will emit a tone and the green LED on the converter will begin to quick blinking.

Exit programming by setting dip switch number 1 to OFF and pressing the C "Cancel" button on the door panel.

If there are more converters, repeat the previous steps introducing a different backbone code for each of them.

If during one of these processes the red LED on the converter switches on, restart programming from the beginning.

Replacement in a 90 system mode (audio installation).

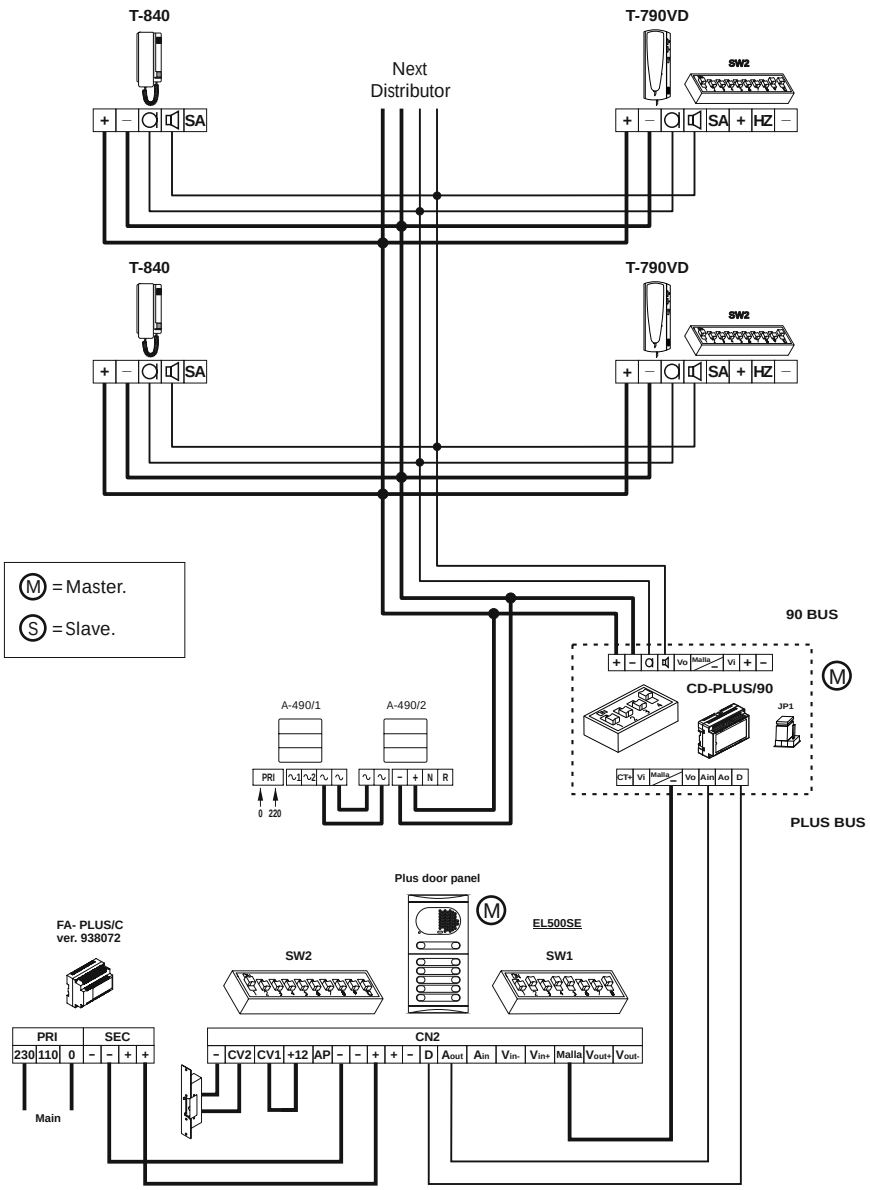

For other configurations of replacement contact with your distributor.

IMPORTANT: To configure and to program each equipment see the appropiate instruction book.

Replacement in a 90 system mode (video installation with coaxial cable).

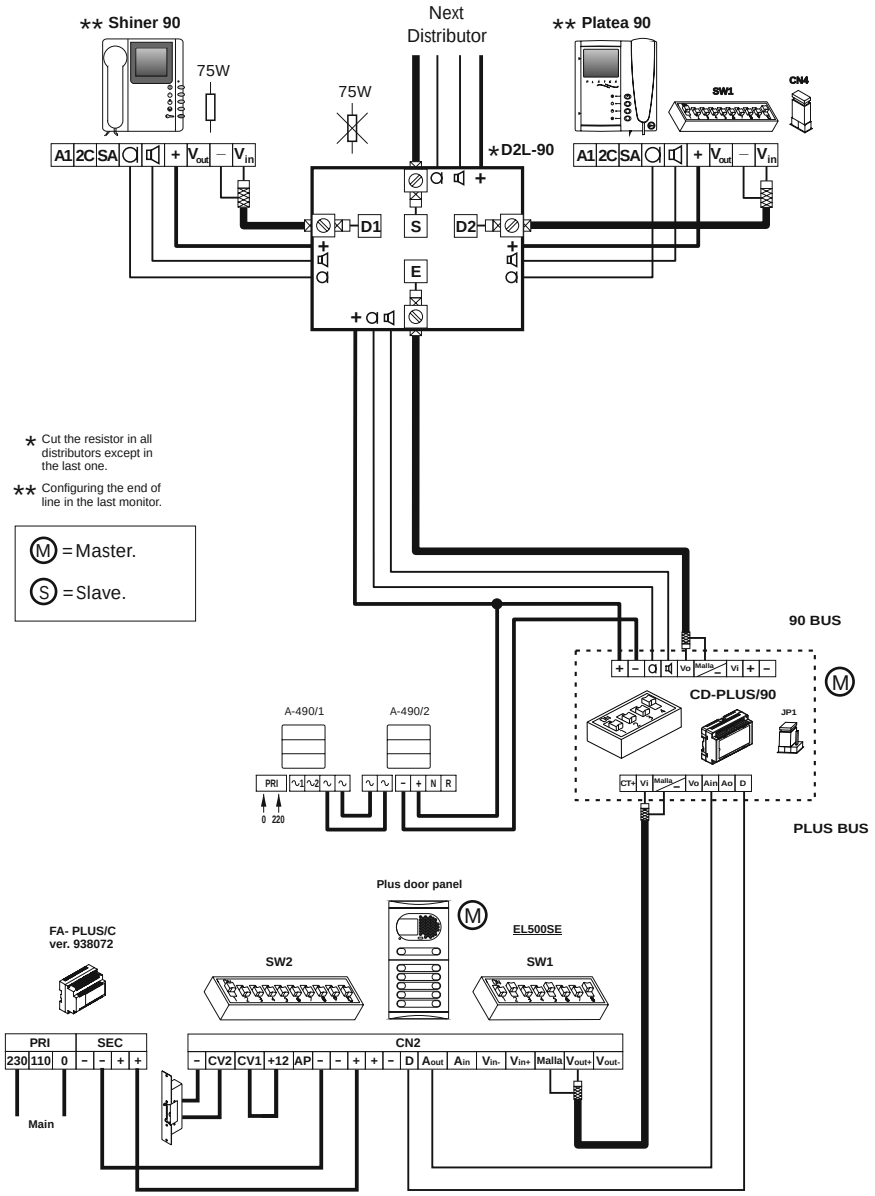

For other configurations of replacement contact with your distributor.

IMPORTANT: To configure and to program each equipment see the appropiate instruction book.

Replacement in a 90 system mode (video installation without coaxial cable).

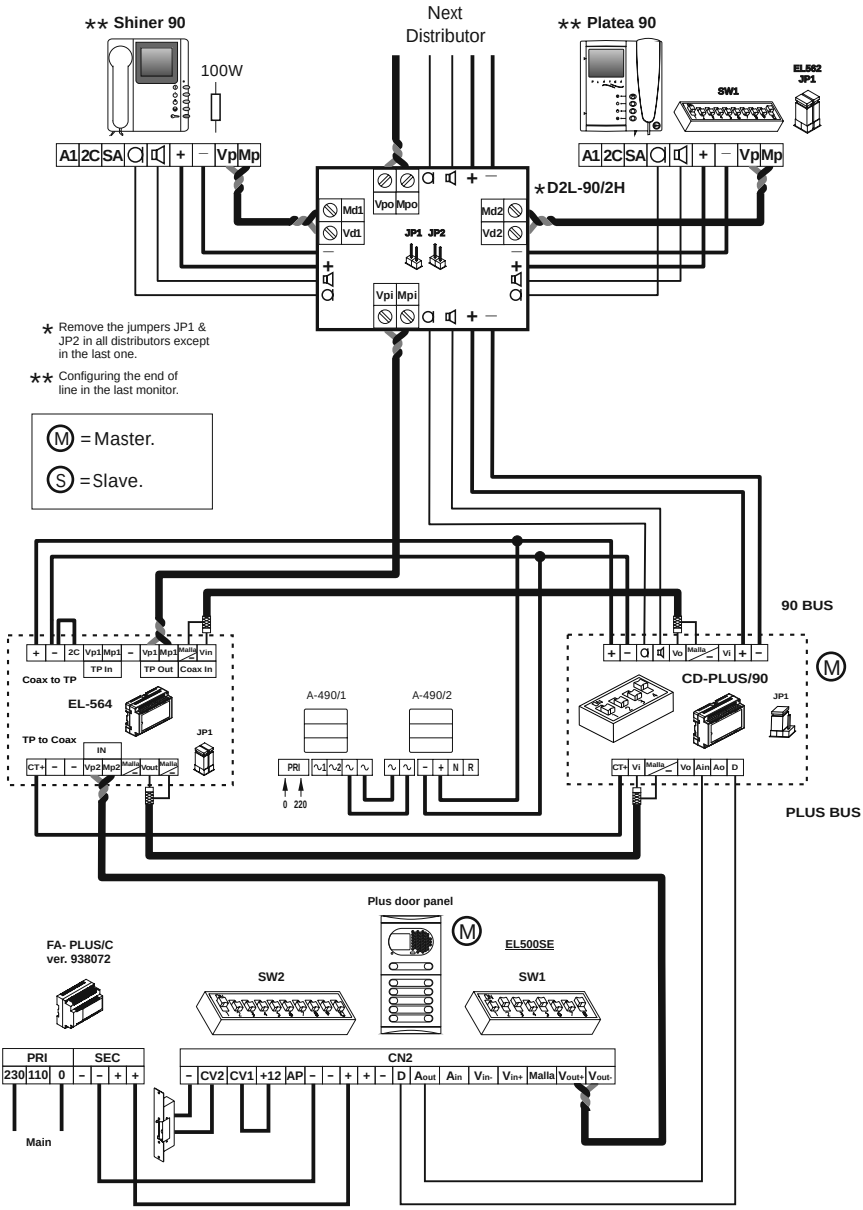

For other configurations of replacement contact with your distributor.

IMPORTANT: To configure and to program each equipment see the appropiate instruction book.

Backbone encoder mode (Plus general door panels with coaxial cable).

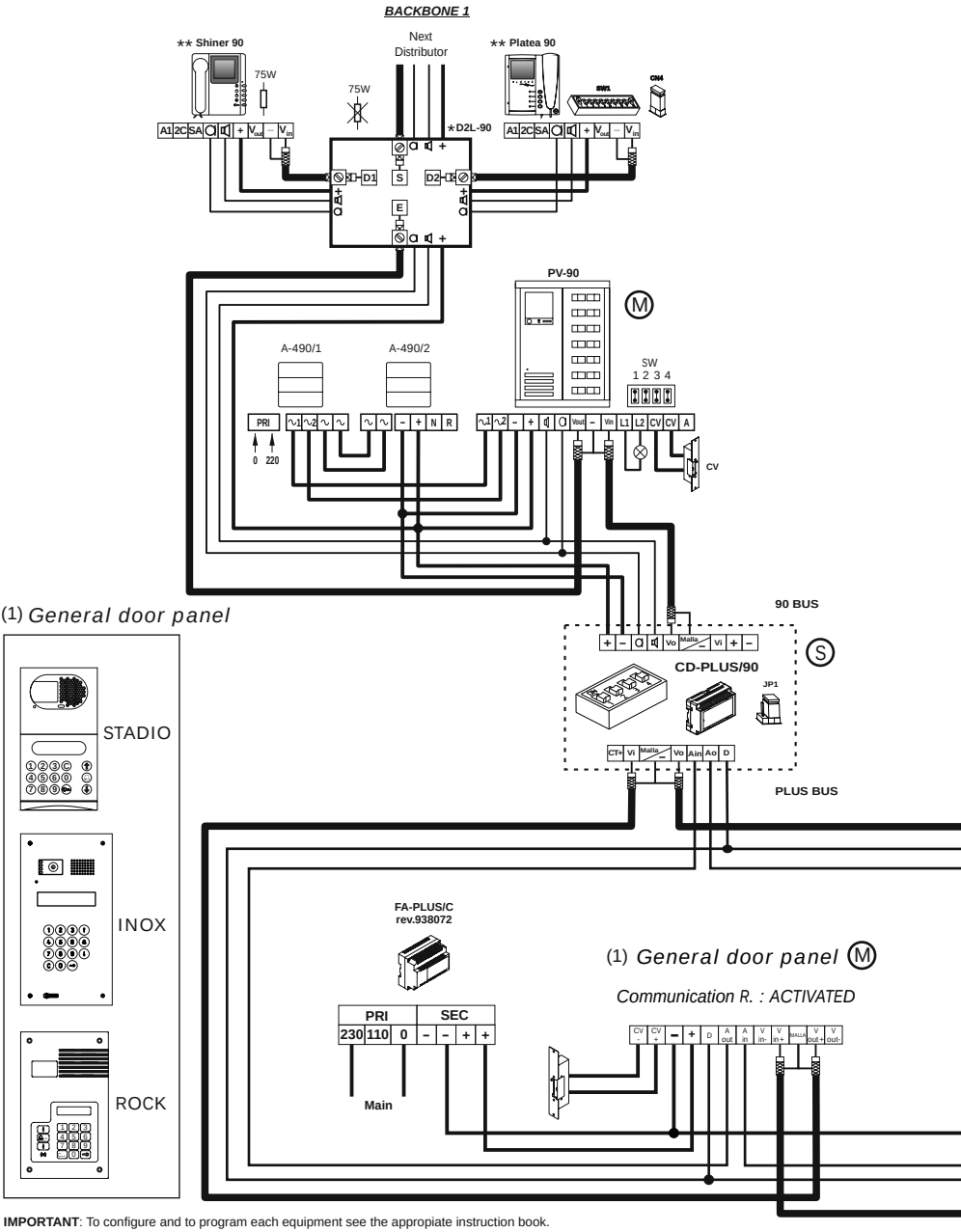

IMPORTANT: To configure and to program each equipment see the appropiate instruction book.

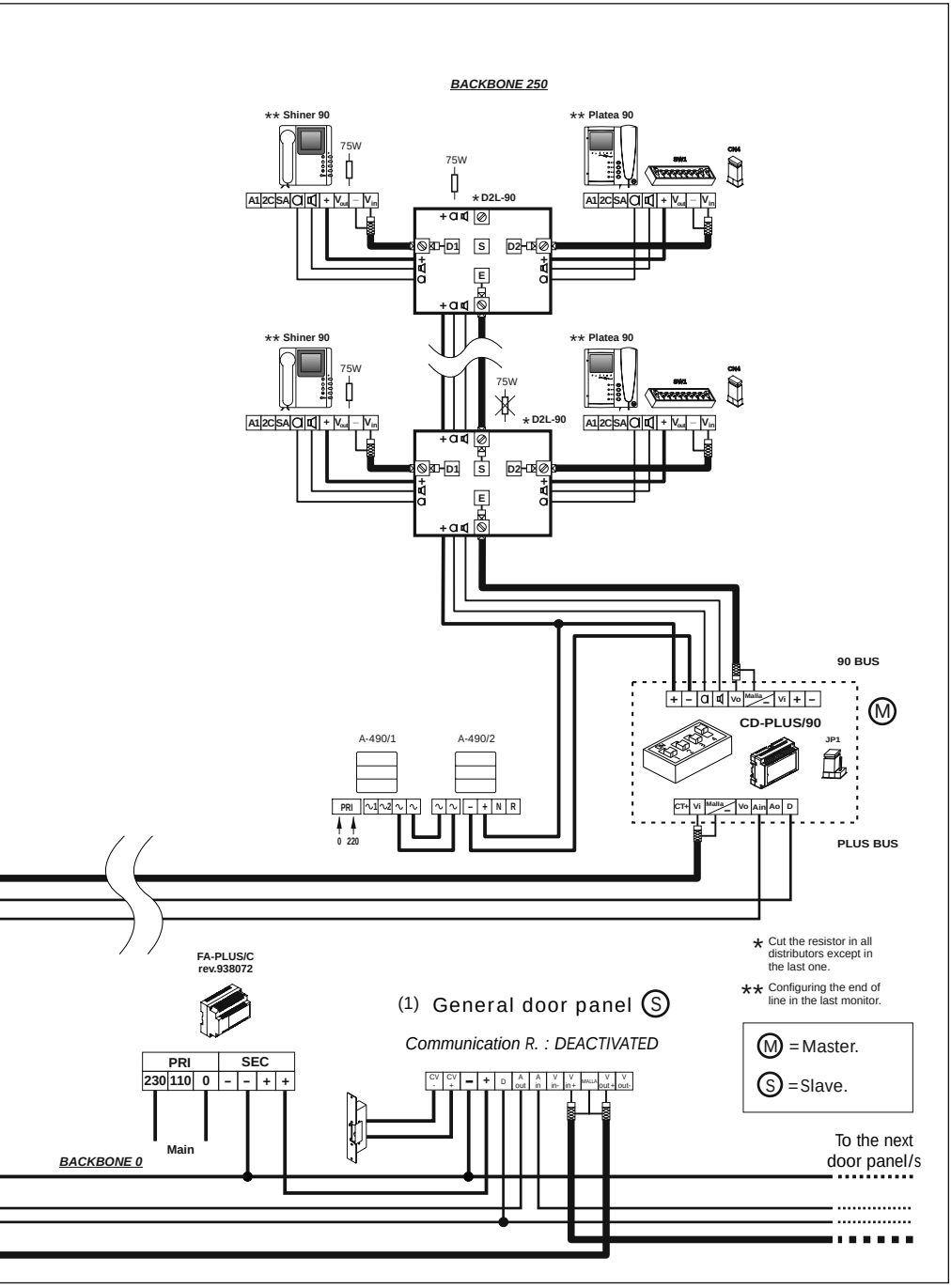
BACKBONE 250
** Shiner 90
** Platea 90
75W
* D2L-90
A1 2C SA
D1 S D2
E
90 BUS
CD-PLUS/90
JP1
Malla
Vo Vi
A-490/1
A-490/2
PRI
0 220
PLUS BUS
FA-PLUS/C
rev.938072
(1) General door panel S
Communication R. : DEACTIVATED
PRI SEC
230 110 0
Main
BACKBONE 0
* Cut the resistor in all distributors except in the last one.
** Configuring the end of line in the last monitor.
M = Master.
S = Slave.
To the next door panel/s

Backbone encoder mode (general door panels without coaxial cable).

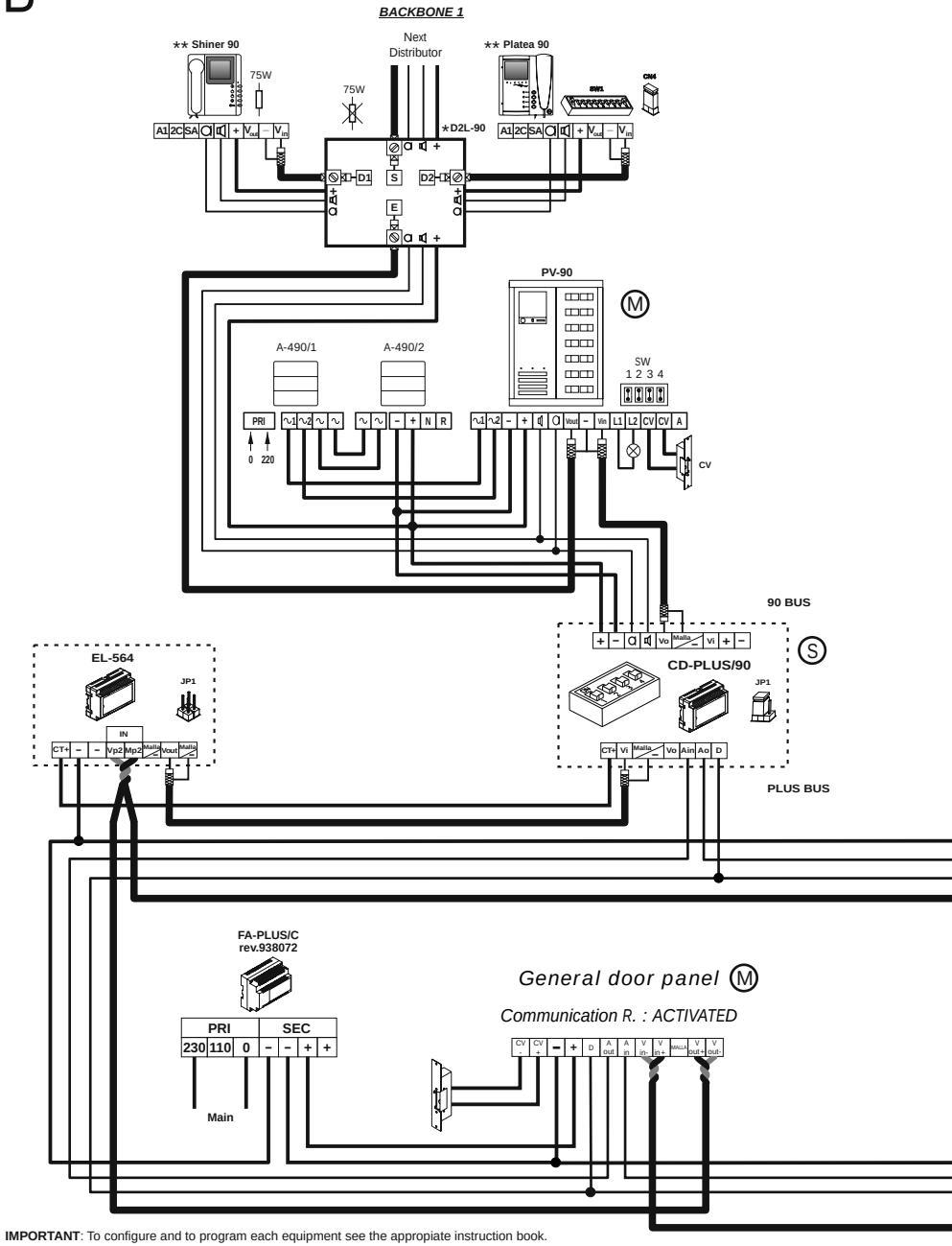

IMPORTANT: To configure and to program each equipment see the appropiate instruction book.

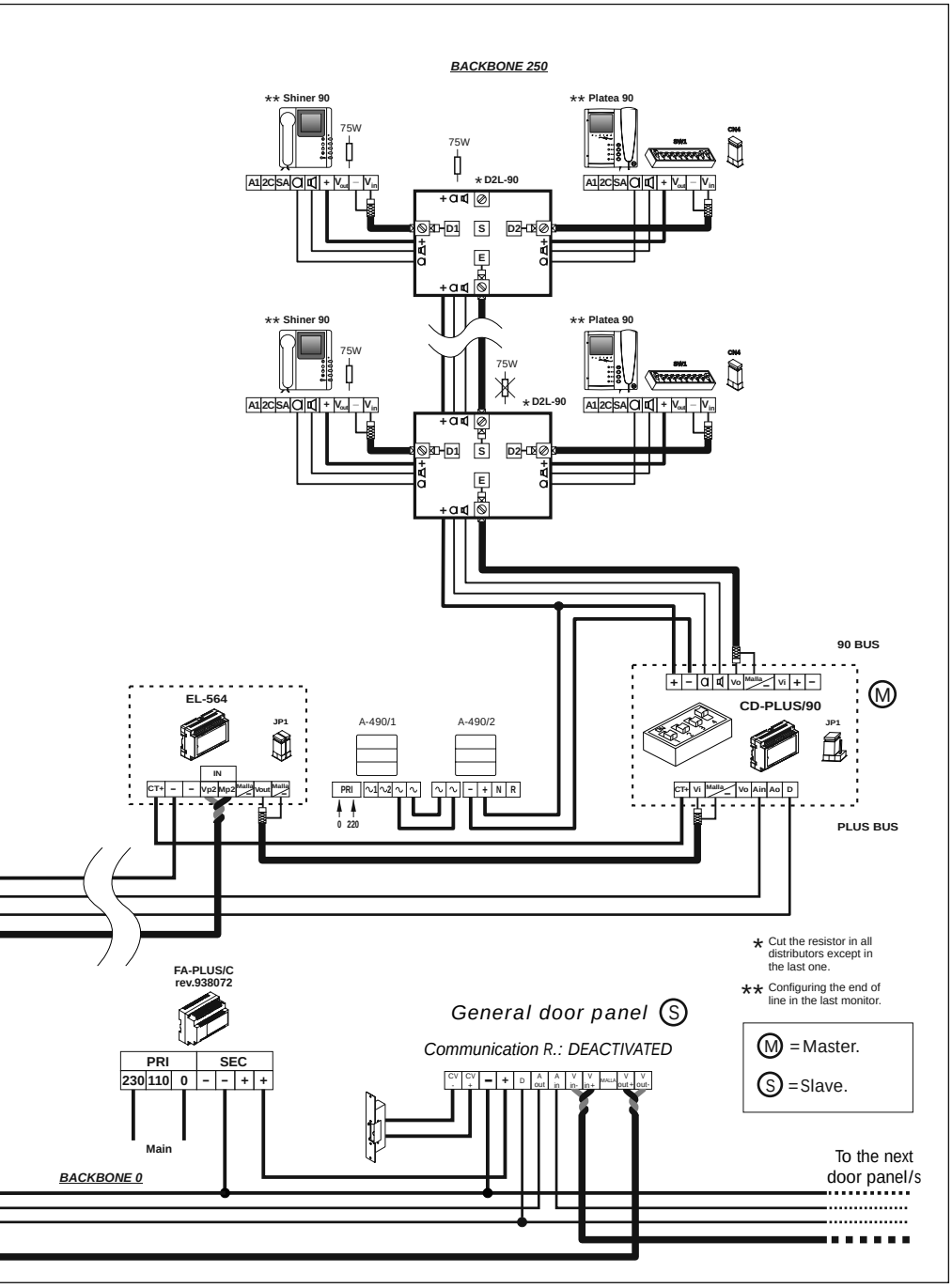
BACKBONE 250
** Shiner 90
** Platea 90
75W
* D2L-90
A1 2C SA
D1
S
D2
E
SW1
CN4
90 BUS
CD-PLUS/90
JP1
EL-564
IN
CT+
Vp2
Mp2
Malla
Vout
A-490/1
A-490/2
PRI
N
R
0 220
Vo
Vi
Ain
Ao
D
PLUS BUS
* Cut the resistor in all distributors except in the last one.
** Configuring the end of line in the last monitor.
FA-PLUS/C
rev.938072
General door panel
Communication R.: DEACTIVATED
PRI
SEC
230
110
0
Main
CV
A out
A in
V in-
V in+
V out+
V out-
M = Master.
S = Slave.
BACKBONE 0
To the next door panel/s

Backbone encoder mode (Coded panel and installation with coaxial cable.)

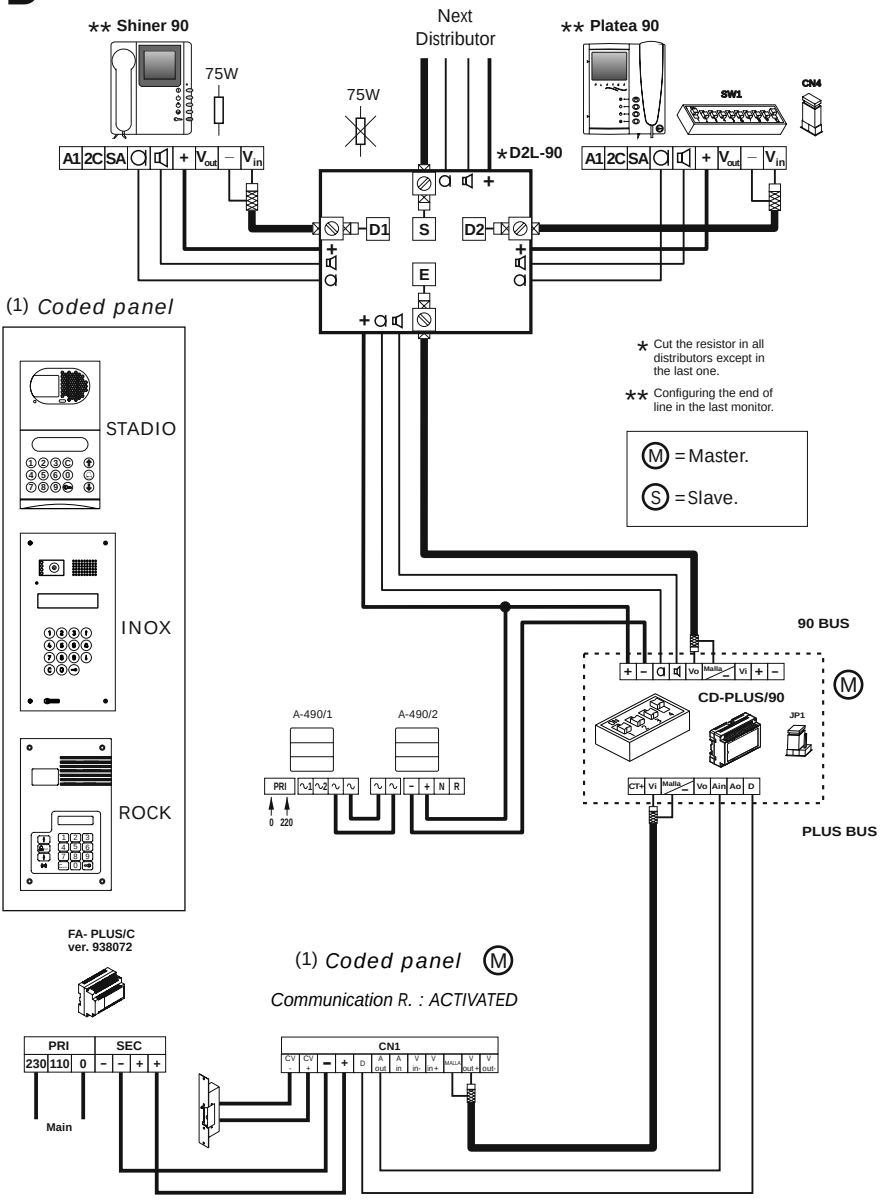

For other configurations of replacement contact with your distributor.

IMPORTANT: To configure and to program each equipment see the appropiate instruction book.

Backbone encoder mode (Coded panel and installation without coaxial cable).

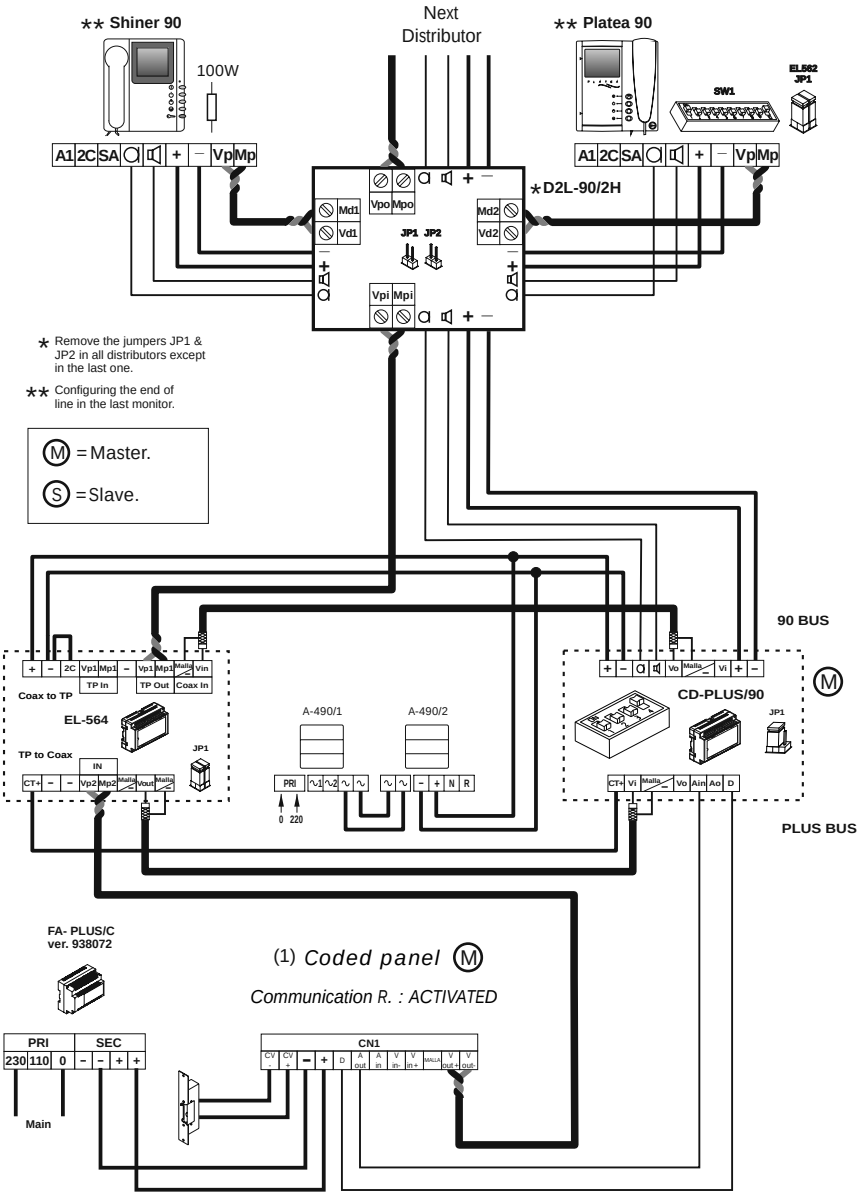

For other configurations of replacement contact with your distributor.

IMPORTANT: To configure and to program each equipment see the appropiate instruction book.

Replacement 90 door panel mode

Calls cannot be made.

- Remember that the system remains inactive for 45 seconds after connecting the power supply.
- Ensure that the backbone for the replacement Plus door panel is configured with address "0". (The converter is factory set with backbone address "0").
- Check the connection of the converter (page 38 to 40) and its configuration (page 36).
- Check the 90 monitor of the installation with address "0" has been configured with another free address (see page 36).

Backbone encoder mode (General door panels)

Calls cannot be made from the general door panels.

- Remember that the system remains inactive for 45 seconds after connecting the power supply.
- Check if calls can be made from the inner door panels (if these exist).
- Ensure that the backbone for the converters has been correctly programmed (page 37) and check their connection (pages 41 to 44) and their configuration (page 36).
- Check the configuration and codification (address) of the monitors (see page 36 and the appropiate instruction book).
- Check that the voltage between "+" and "-" terminals of the A-490/2 power supply, is 24 Vdc., if this is not the case, disconnect the power supply from the installation and measure again. If it's correct now, it means there is a short circuit in the installation. Disconnect the power supply from mains and check the installation.
- Check that the voltage between "+" and "-" terminals of the converter and the different elements of the 90 installation is 24Vd.c, if this is not the case, check the power supply and its connections.
- Check that the voltage between "+" and "-" terminals of the FA-Plus/C power supply is from 17,5 to 18,5Vd.c., if not, check the power supply and its connections.

The converter cannot be programmed.

- Check that the general coded panel is in configuration mode before setting the number 1 dip switch to ON (see page 36) and the programming steps are correctly followed (page 33).
- Check autodiagnostic leds (see page 37).
- Check that the voltage between "+" and "-" terminals of the converter is 24 Vdc., if not, check the power supply and its connections.

Backbone encoder mode (Coded panel)

Calls cannot be made.

- Remember that the system remains inactive for 45 seconds after connecting the power supply.
- Ensure that the backbone for the replacement Plus coded panel is configured with address "0".
  (The converter is factory set with backbone address "0".).
- Check the converter's connection (page 45-46) and their configuration (page 36).
- Check the configuration and codification (address) of the monitors (see page 36 and the appropiate instruction book).
- Check that the voltage between "+" and "-" terminals of the A-490/2 power supply, is 24 Vdc., if this is not the case, disconnect the power supply from the installation and measure again. If it's correct now, it means there is a short circuit in the installation. Disconnect the power supply from mains and check the installation.
- Check that the voltage between "+" and "-" terminals of the converter and the different elements of the 90 installation is 24Vd.c, if this is not the case, check the power supply and its connections.
- Check that the voltage between "+" and "-" terminals of the FA-Plus/C power supply is from 17,5 to 18,5Vd.c., if not, check the power supply and its connections.

1141 Budapest, Fogarasi út 77.
Tel.: *220-7940, 220-7814, 220-7959,
220-8881, 364-3428 Fax: 220-7940
Mobil: 30 531-5454, 30 939-9989

1095 Budapest, Mester utca 34.
Tel.: *218-5542, 215-9771, 215-7550,
216-7017, 216-7018 Fax: 218-5542
Mobil: 30 940-1970, 30 959-0930

www.golmar.hu

E-mail: info@delton.hu Web: www.delton.hu